Forankra
Zabezpieczamy wszystko w transporcie™

Worm Gear Hand Winch WW2000-7500 Painted

Product information

This hand winch is very safe due to the natural braking effect of the worm gear transmission in combination with the load pressure brake. In addition, the winch is easy to use, can be mounted in various ways and has a cable storage up to 120 meters.

- winch suitable for lifting and pulling
- load pressure brake with double ratchet system for safe stable hold of the load in any position
- cable outlet upwards or at rear
- adjustable crank
- suitable for wall and (optional) floor mounting
- 1 layer of paint

Options:

- zinc-plated finish 6 - 8 micron (EV)
- 2 layers of paint (2L)
- grooved drum (GD)
- 2 drum compartment (2D) or multiple up to 8 (XD)
- suitable for floor mounting (FM)
- suitable for Dyneema rope (DY)
- pressure roller (PR)
- free-spooling device for pulling applications. To disengage the drum (FS)
- free-spooling device with additional friction brake for controlled cable unwinding (FSB)
- ATEX certified zone 2 and 22 (EX)
  CE II 3G Ex IIC T4 Gc, -20°C<T amb <+70°C
  CE II 3D Ex IIIC T135°C Dc, -20°C<T amb <+70°C

Marking: According to standard, CE-marked
Standard: EN 13157

Safety factor: 4:1

Код товара	Код	WLL ton	WLL Lifting outer layer (kg)	Rope capacity m	Rope Ø mm	Capacity 1st layer kg	Lifting speed m/min.	Hand force max. kg	A mm	B mm	C mm	D mm	G mm	H mm	J mm	K mm	L mm	M mm	N mm	O mm	P mm	R mm	S mm	Вес kg	Delivery time
16.2777276010	WW2000	2	1 075	60,5	12	2 000	0,3	15	410	310	196	360	137	177	133	25	312	372	57	705	380	434	220	60	12
-	WW2500	2,5	1 344	63,1	12	2 500	0,3	15	410	310	196	360	137	177	133	25	312	372	57	705	380	434	220	60	12
16.2777277010	WW3000	3	1 667	68,7	14	3 000	0,3	14	436	380	251	386	137	203	168	25	375	480	65	813	380	536	220	78	12
16.2777278010	WW4000	4	2 223	53	14	4 000	0,1	13	436	380	251	386	137	203	168	25	375	480	65	813	380	536	220	80	12
16.2777279010	WW5000	5	3 276	57,8	16	5 000	0,2	15	436	467	316	386	137	200	219	25	437	515	75	847	380	618	220	117	12
16.27772710010	WW7500	7,5	3 752	72,6	22	7 500	0,1	15	510	500	350	455	189	202	245	25	630	635	75	968	380	748	220	190	12
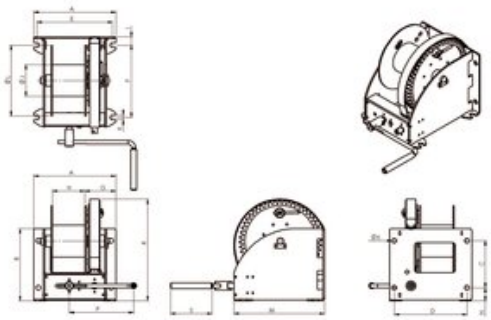
Blueprint