# Lifting Eye RUD VLBG-PLUS

## Product information



VLBG load ring will turn 360°, adjustable in pull direction. Load ring foldable, full WLL in any load direction. ICE bolt made of Grade 120 material for higher resistance. DIN crack tested collared nut.

Also available in long version.

... *Read more*

**Marking:** According to standard, CE-mark
**Standard:** EN 1677-1

**Safety factor:** 4:1

**Forankra Polska**
office@forankra.pl
+48 91 418 25 91

© November 2026 - All Rights Reserved

Forankra
Zabezpieczamy wszystko w transporcie™

# Lifting Eye RUD VLBG-PLUS

## Blueprint

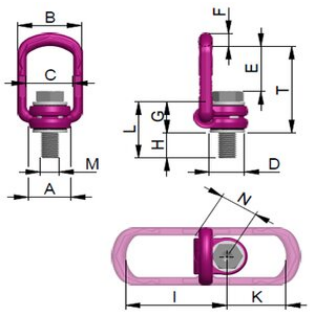


## Technical data

| Код товара | Код | WLL ton | Thread mm | A mm | B mm | C mm | D mm | E mm | F mm | G mm | H mm | I mm | K mm | L mm | M mm | N mm | T mm | Bec kg |
|---|---|---|---|---|---|---|---|---|---|---|---|---|---|---|---|---|---|---|
| 11.428504651 | VLBG-PLUS | 0,63 | M8 | 30 | 52 | 34 | 24 | 40 | 10 | 29 | 11 | 75 | 45 | 40 | M8 | 32 | 75 | 0,3 |
| 11.428504652 | VLBG-PLUS | 0,9 | M10 | 30 | 54 | 34 | 24 | 39 | 10 | 29 | 15 | 75 | 45 | 44 | M10 | 32 | 75 | 0,31 |
| 11.428504653 | VLBG-PLUS | 1,35 | M12 | 32 | 54 | 34 | 26 | 38 | 10 | 29 | 18 | 75 | 45 | 47 | M12 | 32 | 75 | 0,34 |
| 11.428504655 | VLBG-PLUS | 2 | M16 | 34,5 | 56 | 38 | 30 | 39 | 13,5 | 36 | 22 | 86 | 47 | 58 | M16 | 38 | 85 | 0,55 |
| 11.428504657 | VLBG-PLUS | 3,5 | M20 | 50 | 82 | 54 | 45 | 55 | 17 | 43 | 32 | 113 | 64 | 75 | M20 | 48 | 110 | 1,3 |
| 11.428504659 | VLBG-PLUS | 4,5 | M24 | 50 | 82 | 54 | 45 | 67 | 17 | 43 | 37 | 130 | 78 | 80 | M24 | 48 | 125 | 1,4 |
| 11.428504661 | VLBG-PLUS | 6,7 | M30 | 60 | 103 | 65 | 60 | 67 | 22,5 | 61 | 49 | 151 | 80 | 110 | M30 | 67 | 147 | 3,22 |
| - | VLBG-PLUS | 7 | M36 | 60 | 103 | 65 | 60 | 74 | 22,5 | 55 | 52 | 151 | 80 | 107 | M36 | 67 | 146 | 3,4 |
| 11.427983553 | VLBG-PLUS | 8 | M36 | 77 | 122 | 82 | 70 | 97 | 26,5 | 77 | 63 | 205 | 113 | 140 | M36 | 87 | 197 | 5,97 |
| 11.427983554 | VLBG-PLUS | 10 | M42 | 77 | 122 | 82 | 70 | 94 | 26,5 | 77 | 73 | 205 | 113 | 150 | M42 | 79 | 196 | 6,6 |
| 11.427982966 | VLBG-PLUS | 15 | M42 | 95 | 156 | 100 | 85 | 109 | 36 | 87 | 63 | 230 | 130 | 150 | M42 | 100 | 222 | 10,9 |
| 11.427982967 | VLBG-PLUS | 20 | M48 | 95 | 156 | 100 | 95 | 105 | 36 | 87 | 73 | 230 | 130 | 160 | M48 | 100 | 222 | 11,6 |

**Forankra Polska**
office@forankra.pl
+48 91 418 25 91

© November 2026 - All Rights Reserved