Lifting Eye RUD ACP-TURNADO

Product information



- Unique RUD spring meachanism
- No stopping of the lifting bale
- No dangerous transverse loads - no worst case
- Integrated RFID transponder to make checks easier
- Wear lenses for checking discard criteria

Also available in long version.

... *Read more*

Marking: According to standard
Standard: EN 1677-1

Safety factor: 4:1

Forankra Polska
office@forankra.pl
+48 91 418 25 91

© November 2026 - All Rights Reserved

Forankra
Zabezpieczamy wszystko w transporcie™

Lifting Eye RUD ACP-TURNADO

Blueprint

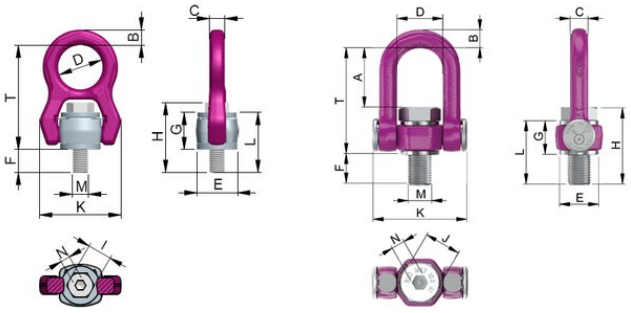

Technical data

WLL ton	Thread mm	A mm	B mm	C mm	D mm	E mm	F mm	G mm	H mm	I mm	K mm	L mm	M mm	N mm	T mm	Bec kg
2,5	M16	-	14	14	50	40	22	36	68	24	76	58	M16	10	107	0,88
4	M20	-	17	17,25	50	45	26,5	43,5	82,5	30	89	70	M20	12	118	1,41
6,3	M24	-	23	23	66	60	34	55	104	36	120,5	89	M24	14	154	3,16
8	M30	-	29	27	75	75	41,5	68,5	128,7	46	148	110	M30	17	183	5,69

Forankra Polska
office@forankra.pl
+48 91 418 25 91

© November 2026 - All Rights Reserved