Forankra
Zabezpieczamy wszystko w transporcie™

U-Bolt Clip DIN 741 Stainless

Product information

Wire rope clips for steel wire rope for general applications.
Design: Forged U-bolt and casted bases.

Material: Bases AISI 316, u-bolt AISI 304.
Marking: According to standard
Standard: DIN 741
Note: Follow the fitting instructions in the user manual before use.
Warning: Not approved for lifting.

Part code	Rope Ø range mm	A mm	d mm	H mm	Weight kg/100pc	Delivery time
47090145W	3	9	4	20	1.2	12
47090025W	5	11	5	24	1.4	12
47090019W	6	13	5	28	1.7	12
47090020W	8	16	6	34	4.1	12
47090028W	10	20	8	42	5.9	12
10.1674112S	12	24	10	55	13	12
10.1674116S	16	30	12	63	21	12
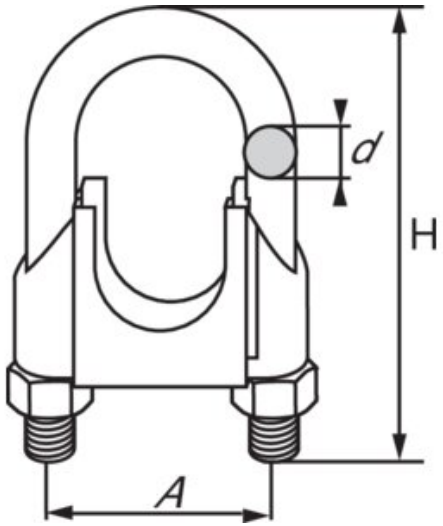
Blueprint