Forankra
Zabezpieczamy wszystko w transporcie™

# U-Bolt Clip DIN 741 Stainless

## Product information

Wire rope clips for steel wire rope for general applications.
**Design:** Forged U-bolt and casted bases.

**Material:** Bases AISI 316, u-bolt AISI 304.
**Marking:** According to standard
**Standard:** DIN 741
**Note:** Follow the fitting instructions in the user manual before use.
**Warning:** Not approved for lifting.

| Part code | Rope Ø range mm | A mm | d mm | H mm | Weight kg/100pc | Delivery time |
|---|---|---|---|---|---|---|
| 47090145W | 3 | 9 | 4 | 20 | 1.2 | 12 |
| 47090025W | 5 | 11 | 5 | 24 | 1.4 | 12 |
| 47090019W | 6 | 13 | 5 | 28 | 1.7 | 12 |
| 47090020W | 8 | 16 | 6 | 34 | 4.1 | 12 |
| 47090028W | 10 | 20 | 8 | 42 | 5.9 | 12 |
| 10.1674112S | 12 | 24 | 10 | 55 | 13 | 12 |
| 10.1674116S | 16 | 30 | 12 | 63 | 21 | 12 |
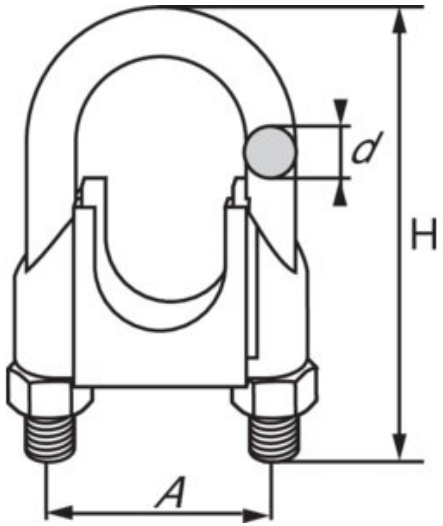
## Blueprint