Universal Screw-Lifting Clamp TSCC/TSCC-W

Product information



Universal screw clamp for vertical and horizontal lifting and transporting of a large variety of steel structures. Can also be attached upside down and be used as a (temporary) lifting point.
Model TSCC : standard screw clamp.
Model TSCC-W: With enlarged jaw opening.

Features:

- Special universal design ensures multi-purpose application of lifting steel structures.
- Fitted with a moveable cam on the thread spindle which provides a powerful clamping force on the workpiece.
- Equipped with a safety screw spindle mechanism, ensuring the clamp does not slip when lifting force is applied.
- Lightweight design for easy handling.
- Tough quality heavy duty drop forged body.
- Forged alloy components, where required.
- Maintenance-friendly, easy to exchange parts which are available upon request.
- No minimal WLL needed.

... *Read more*

Marking: According to standard, CE-mark, Type, serial number, WLL, Jaw opening.
Temperature range: -40°C up to +100°C.
Standard: EN 13155
Warning: Hardness level of the material surface may not exceed 37 HrC (345 Hb, 1166 N/mm2)

Forankra Polska
office@forankra.pl
+48 91 418 25 91

© November 2026 - All Rights Reserved

Forankra
Zabezpieczamy wszystko w transporcie™

Universal Screw-Lifting Clamp TSCC/TSCC-W

Blueprint

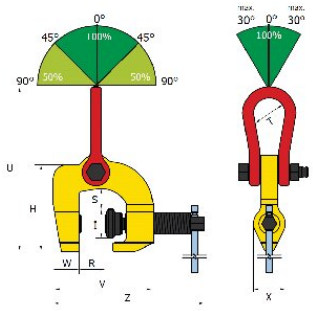

Technical data

Part code	Code	WLL ton	Jaw width mm	S mm	l mm	W mm	V mm	Z mm	U mm	H mm	T mm	X mm	Weight kg
44010008B	0.5 TSCC	0.5	0-35	18	27.5	26	108	158	211	82	25	27	1
44010202B	1 TSCC	1	0-40	29	42	40	150	220	232	140	46	46	3.3
44010204B	1 TSCC-W	1	50-100	88	42	50	225	258	273	190	45	46	6.3
44010054B	1.5 TSCC	1.5	0-40	29	42	40	150	220	232	140	46	46	3.5
44010205B	3 TSCC-W	3	25-75	50	49	60	215	250	291	191	50	54	7.8
44010203B	3 TSCC	3	0-60	38	50	46	190	280	278	184	50	60	7.8
44010102B	6 TSCC	6	0-100	60	63	70	296	446	390	249	100	75	22

Forankra Polska
office@forankra.pl
+48 91 418 25 91

© November 2026 - All Rights Reserved