Lifting Eye RUD VLBG-PLUS

Product information



VLBG load ring will turn 360°, adjustable in pull direction. Load ring foldable, full WLL in any load direction. ICE bolt made of Grade 120 material for higher resistance. DIN crack tested collared nut.

Also available in long version.

... *Read more*

Material: Forged high strength steel
Marking: According to standard, CE-mark, WLL
Finish: Striking fluorescent pink powder coating.
Standard: EN 1677-1

Safety factor: 4:1

Forankra Polska
office@forankra.pl
+48 91 418 25 91

© November 2026 - All Rights Reserved

Forankra
Zabezpieczamy wszystko w transporcie™

Lifting Eye RUD VLBG-PLUS

Blueprint

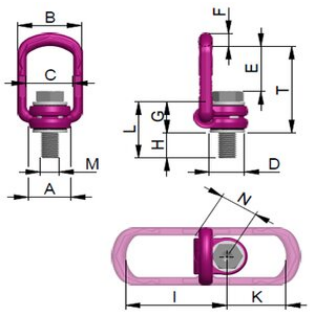

Technical data

Part code	Code	WLL ton	Thread mm	A mm	B mm	C mm	D mm	E mm	F mm	G mm	H mm	I mm	K mm	L mm	M mm	N mm	T mm	Weight kg
11.428504651	VLBG-PLUS	0.63	M8	30	52	34	24	40	10	29	11	75	45	40	M8	32	75	0.3
11.428504652	VLBG-PLUS	0.9	M10	30	54	34	24	39	10	29	15	75	45	44	M10	32	75	0.31
11.428504653	VLBG-PLUS	1.35	M12	32	54	34	26	38	10	29	18	75	45	47	M12	32	75	0.34
11.428504655	VLBG-PLUS	2	M16	34.5	56	38	30	39	13.5	36	22	86	47	58	M16	38	85	0.55
11.428504657	VLBG-PLUS	3.5	M20	50	82	54	45	55	17	43	32	113	64	75	M20	48	110	1.3
11.428504659	VLBG-PLUS	4.5	M24	50	82	54	45	67	17	43	37	130	78	80	M24	48	125	1.4
11.428504661	VLBG-PLUS	6.7	M30	60	103	65	60	67	22.5	61	49	151	80	110	M30	67	147	3.22
-	VLBG-PLUS	7	M36	60	103	65	60	74	22.5	55	52	151	80	107	M36	67	146	3.4
11.427983553	VLBG-PLUS	8	M36	77	122	82	70	97	26.5	77	63	205	113	140	M36	87	197	5.97
11.427983554	VLBG-PLUS	10	M42	77	122	82	70	94	26.5	77	73	205	113	150	M42	79	196	6.6
11.427982966	VLBG-PLUS	15	M42	95	156	100	85	109	36	87	63	230	130	150	M42	100	222	10.9
11.427982967	VLBG-PLUS	20	M48	95	156	100	95	105	36	87	73	230	130	160	M48	100	222	11.6

Forankra Polska
office@forankra.pl
+48 91 418 25 91

© November 2026 - All Rights Reserved