# Lifting Eye RUD ACP-TURNADO

**Product information**



- Unique RUD spring meachanism
- No stopping of the lifting bale
- No dangerous transverse loads - no worst case
- Integrated RFID transponder to make checks easier
- Wear lenses for checking discard criteria

Also available in long version.

... *Read more*

**Marking:** According to standard
**Temperature range:** -40°C up to +100°C.
**Standard:** EN 1677-1

**Safety factor:** 4:1

**Forankra Polska**
office@forankra.pl
+48 91 418 25 91

© November 2026 - All Rights Reserved

Forankra
Zabezpieczamy wszystko w transporcie™

# Lifting Eye RUD ACP-TURNADO

## Blueprint

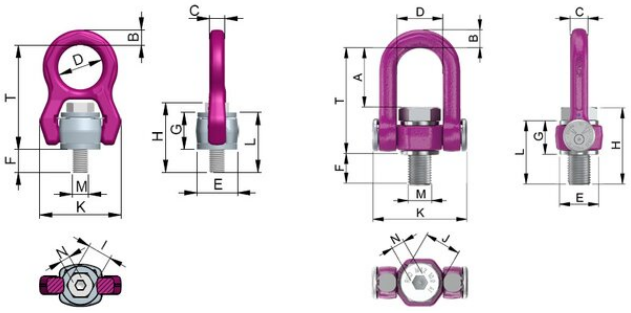


## Technical data

| WLL ton | Thread mm | A mm | B mm | C mm | D mm | E mm | F mm | G mm | H mm | I mm | K mm | L mm | M mm | N mm | T mm | Weight kg |
|---|---|---|---|---|---|---|---|---|---|---|---|---|---|---|---|---|
| 2.5 | M16 | - | 14 | 14 | 50 | 40 | 22 | 36 | 68 | 24 | 76 | 58 | M16 | 10 | 107 | 0.88 |
| 4 | M20 | - | 17 | 17.25 | 50 | 45 | 26.5 | 43.5 | 82.5 | 30 | 89 | 70 | M20 | 12 | 118 | 1.41 |
| 6.3 | M24 | - | 23 | 23 | 66 | 60 | 34 | 55 | 104 | 36 | 120.5 | 89 | M24 | 14 | 154 | 3.16 |
| 8 | M30 | - | 29 | 27 | 75 | 75 | 41.5 | 68.5 | 128.7 | 46 | 148 | 110 | M30 | 17 | 183 | 5.69 |

**Forankra Polska**
office@forankra.pl
+48 91 418 25 91

© November 2026 - All Rights Reserved